California Faucets®

StyleDrain®

ROUGH KIT

9177

Suggested Uses
- *Shower drain*
- *Patio/Atrium drains*
- *Other wetted area floor drains*

Features
- *Square design for easy floor design and installation*
- *Brass throat with stainless steel tile frame, screws, & mudguard*
- *Acid resist coated cast iron body with reversible weep-hole membrane collar*
- *Outlet connection: 2" no-hub*
- *Compatible with all StyleDrain Grids (9170-A → 9176-A) sold separately*
- *For complete selection, see www.californiafaucets.com*

Codes/Standards Applicable
- *Specified model meets or exceeds the following:*
- *ASME A112.18.2/CSA B125.2*
- *US PAT NO. 8043497*

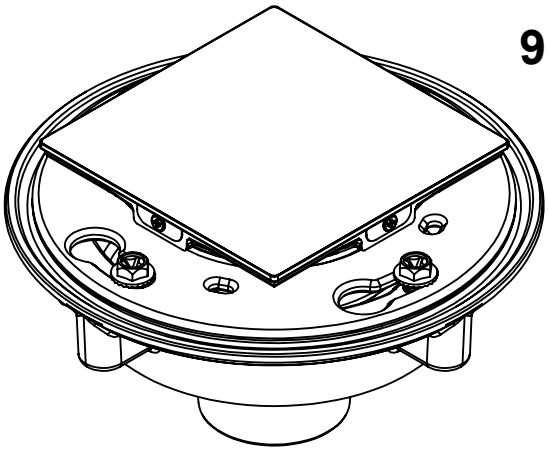

CAST IRON 2" NO HUB

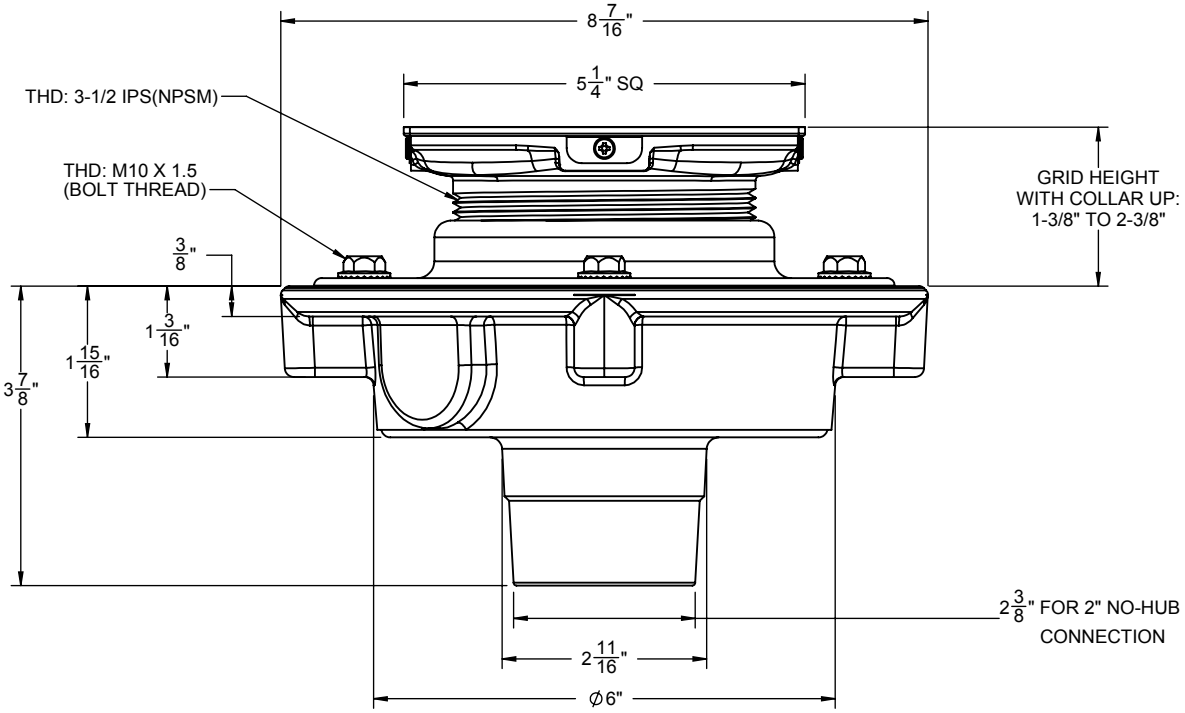

Figure 1. COLLAR IN **UP** POSITION

Figure 2. COLLAR IN **DOWN** POSITION

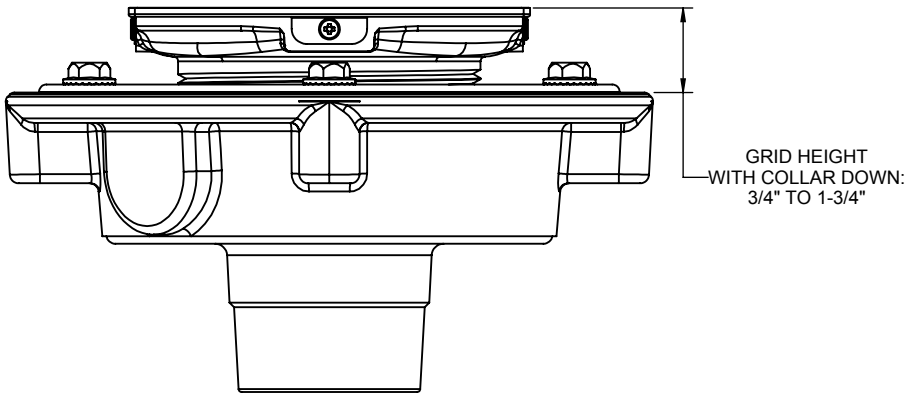

ALL DIMENSIONS SHOWN TO NEAREST 1/16"